NENAB®

NENAB jacking beam type FL-7/6 is designed for use on four column lifts or over inspection pits.

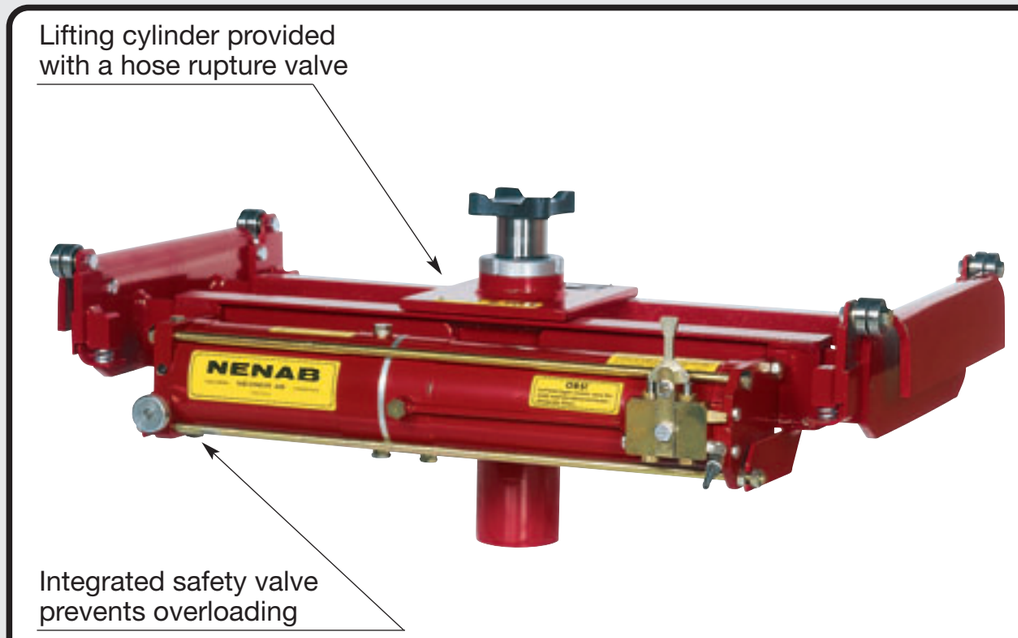

CE -marked

The jack is designed to be used to jack up cars and light trucks in connection with inspection and repair of wheel suspensions, steering mechanisms, wheel bearings and tyres, etc.

The jack requires little space, and has easily manoeuvrable controls with two speeds, high-speed travel to hoisting position.

The jack is supplied as standard with a replaceable lifting saddle and piston extender, length 150 mm.

A lifting yoke for two-point lifting, max. 2 tonnes load, with min. 820 mm and max. 1260 mm between the lifting points, is available as an accessory.

Lifting power 6 tonnes at 7 bar. See overleaf for the main dimensions.

Manufacturer: Ing.firma NEVINOR AB, Box 311, 811 23 SANDVIKEN, Sweden
Tfn. +46 26 25 07 30. Fax +46 26 25 88 25

Lifting power 6 tonnes at 7 bar.
Lifting motion 200 mm.

NENAB

A guarantee of high quality and practicality.

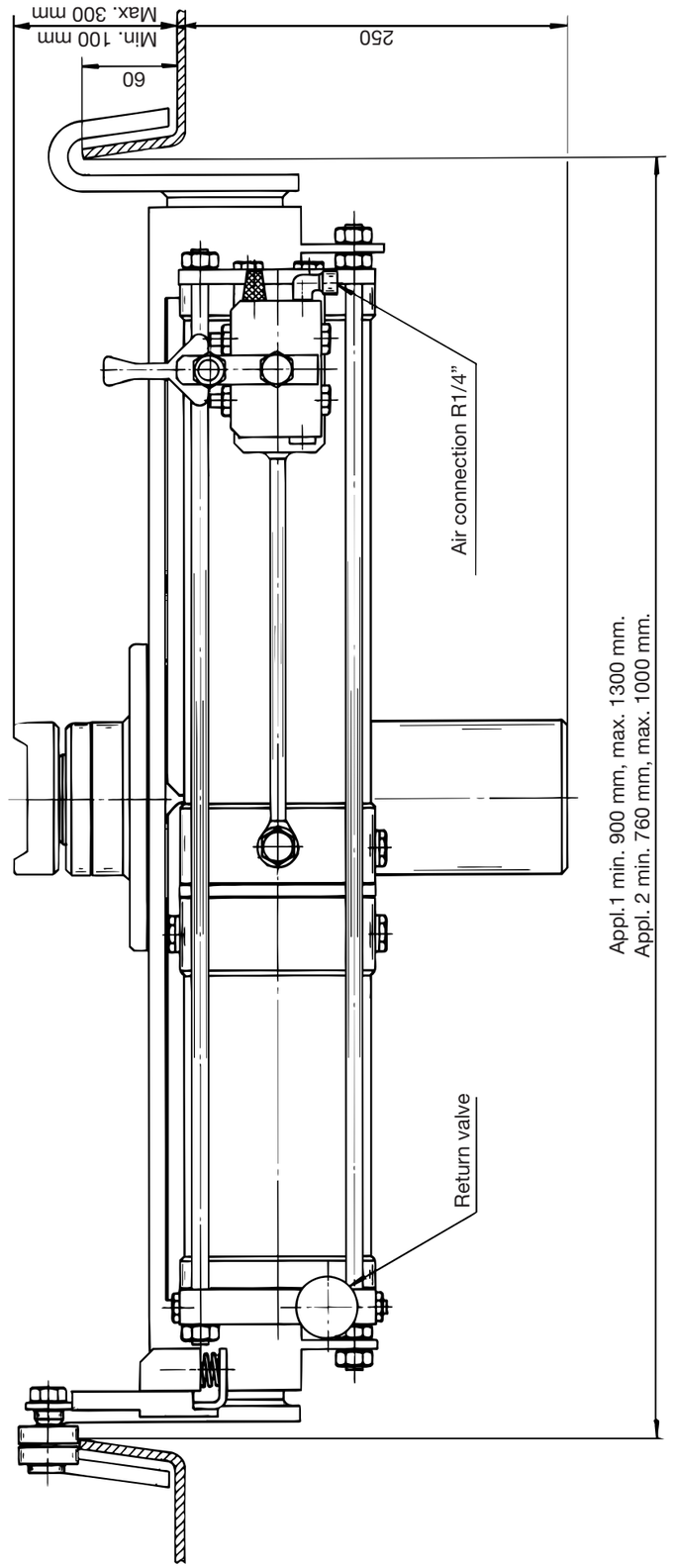

The figure shows the jack´s main dimensions.